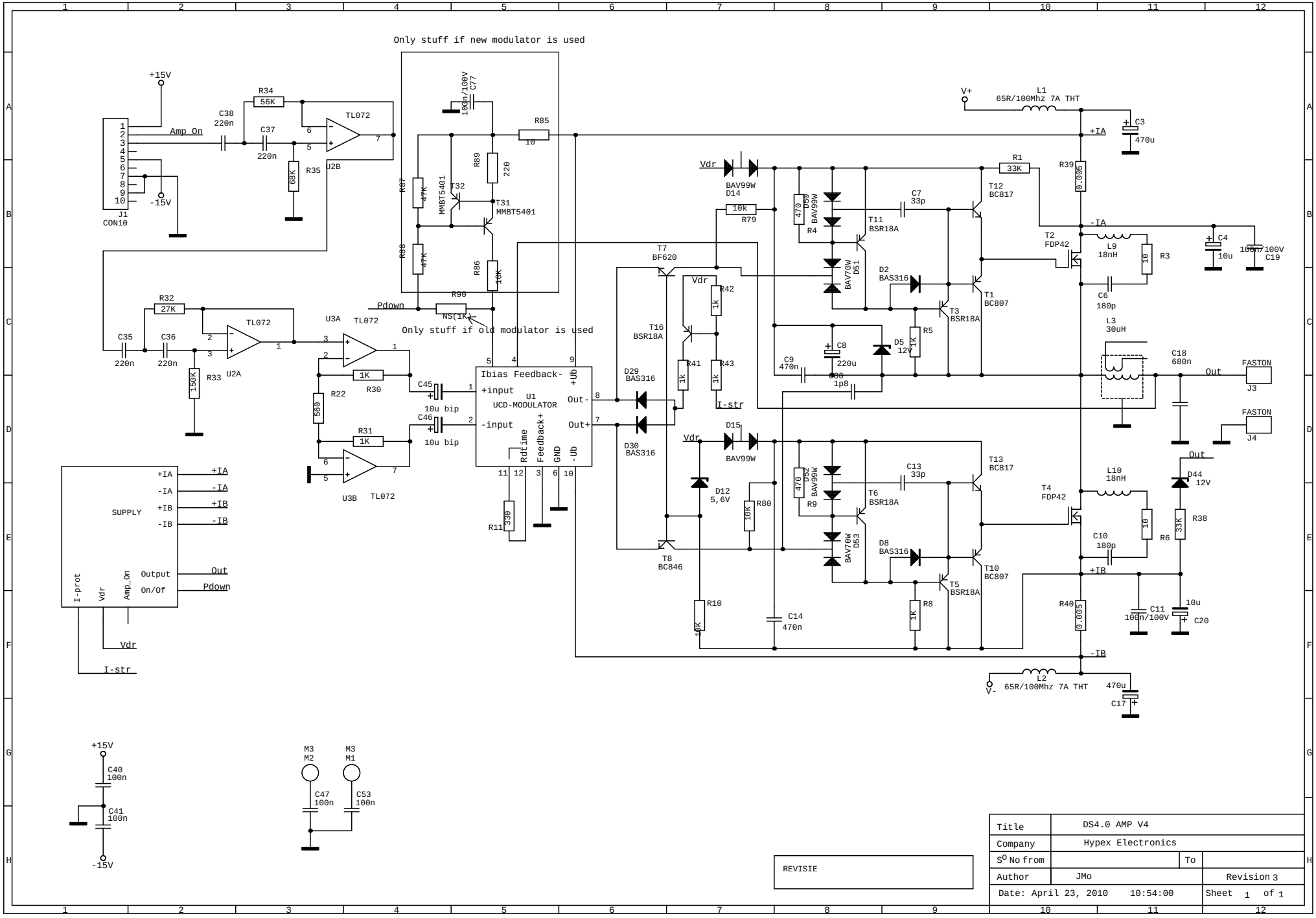

Title	DS4.0 AMP V4		
Company	Hypex Electronics		
S^O No from		To	
Author	JMo		Revision 3
Date: April 23, 2010 10:54:00			Sheet 1 of 1

REVISIE